Electric Hose Binding Machine

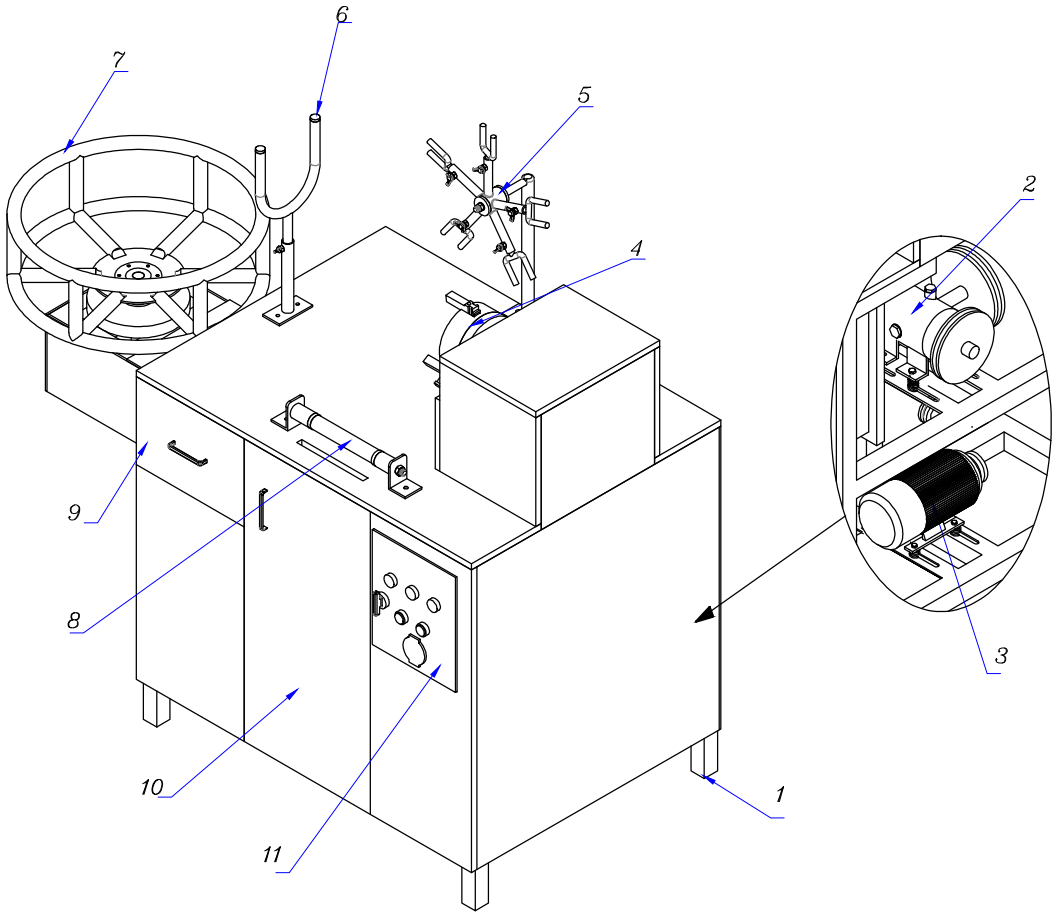

ITEM	Part name	Material
1	Frame	C.STEEL
2	Girbox	
3	Motor	
4	Tree-Jaw Chuck	S.STEEL
5	Wire Holder	S.STEEL
6	Hose Guide	S.STEEL
7	Hose Reel	C.STEEL
8	Wire Conductive	
9	Drawer	MDF
10	Door	MDF
11	Distribution Panel	

NOTE: Electric Hose Binding Machine

Date	Design	Drawn	Checked	REV.

Part Name: Frame

Material: As above chart

Drawing No: EHB-001

PROJECT:

I.T.E

TOL.: DIN-7168m

Size: A4

Scale:

Sheet: Of

QTY. :